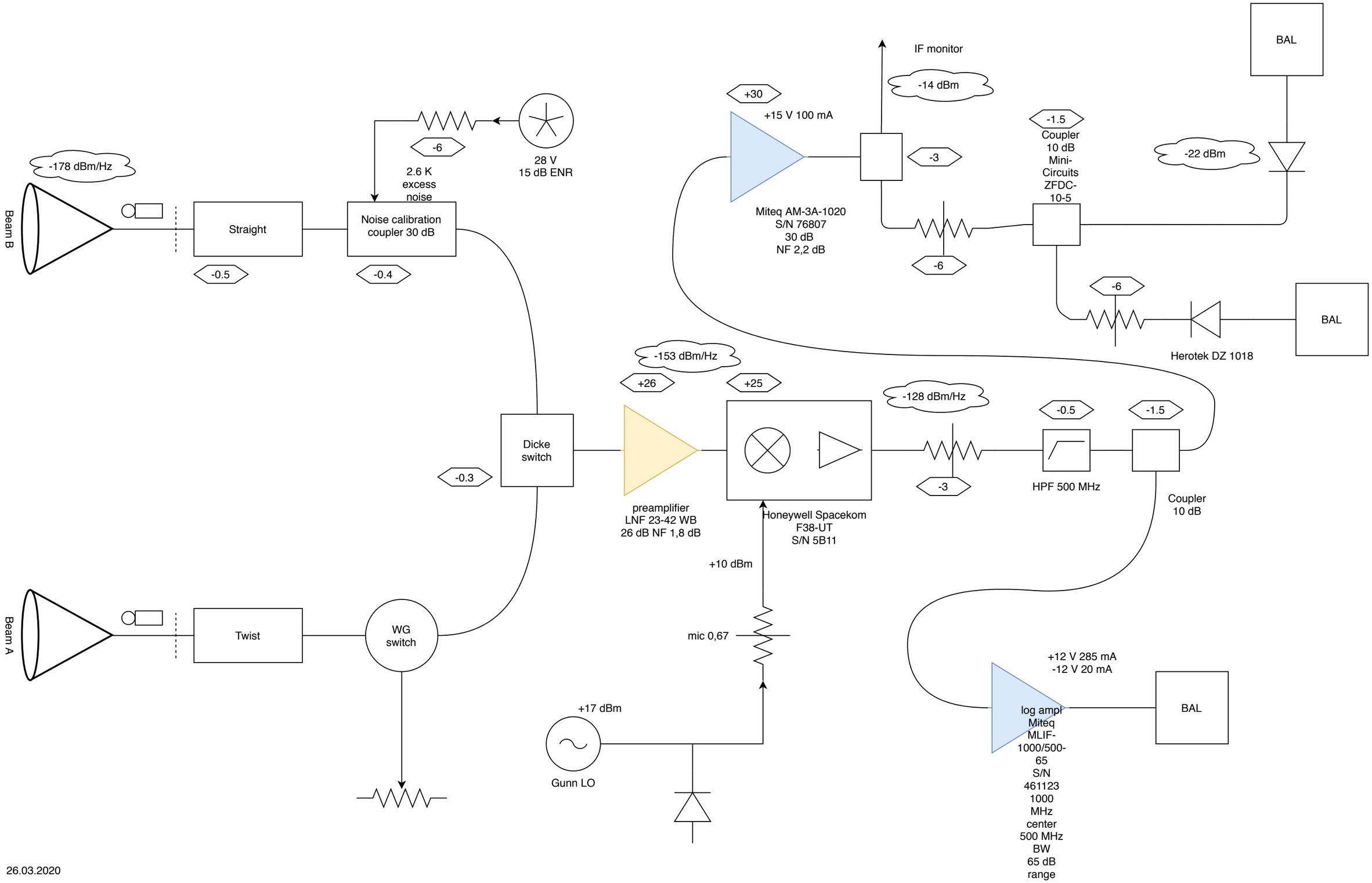
Beam B
-178 dBm/Hz
Straight
-0.5
Noise calibration coupler 30 dB
-0.4
2.6 K excess noise
-6
28 V
15 dB ENR
Dicke switch
-0.3
Beam A
Twist
WG switch
+30
+15 V 100 mA
Miteq AM-3A-1020
S/N 76807
30 dB
NF 2,2 dB
IF monitor
-14 dBm
-3
-6
-1.5
Coupler
10 dB
Mini-Circuits
ZFDC-10-5
-22 dBm
BAL
-6
Herotek DZ 1018
BAL
-153 dBm/Hz
+26
+25
preamplifier
LNF 23-42 WB
26 dB NF 1,8 dB
Honeywell Spacekom
F38-UT
S/N 5B11
-128 dBm/Hz
-3
-0.5
HPF 500 MHz
-1.5
Coupler
10 dB
+10 dBm
mic 0,67
+17 dBm
Gunn LO
+12 V 285 mA
-12 V 20 mA
log ampl
Miteq
MLIF-1000/500-65
S/N 461123
1000 MHz
center
500 MHz
BW
65 dB
range
BAL

26.03.2020