KONGSBERG

Thruster Digital Twin

Introduction & Motivation

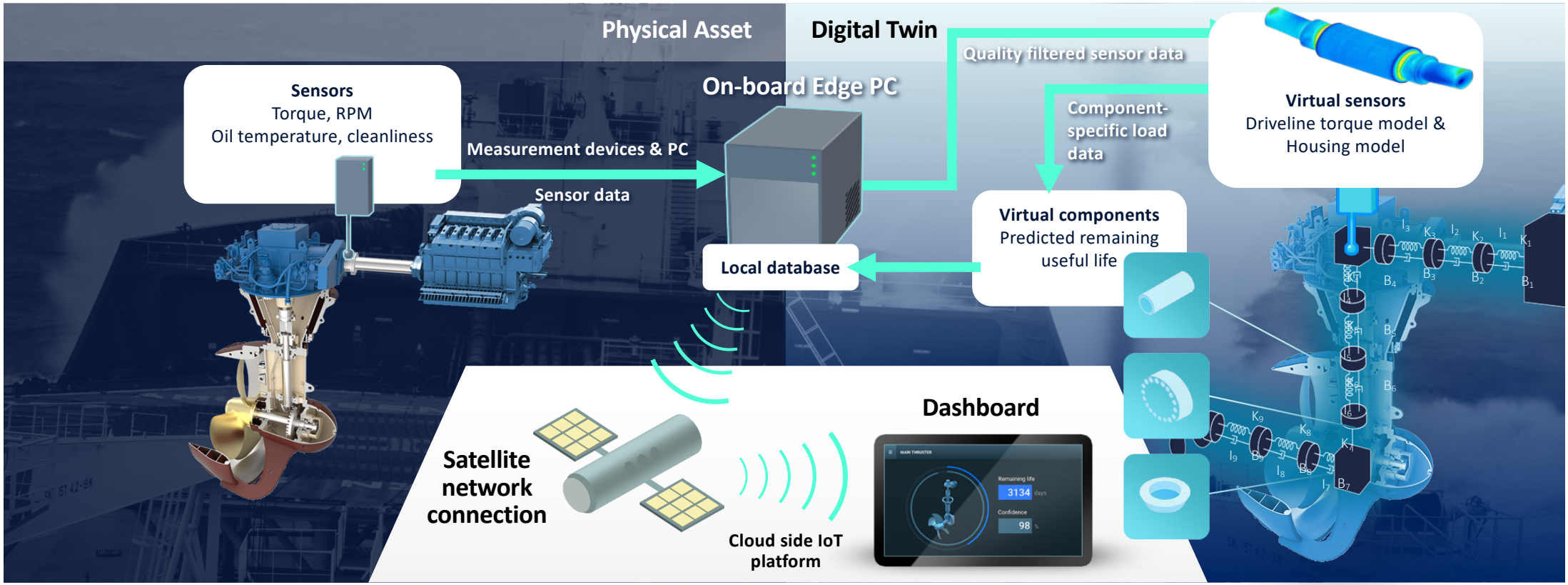

KONGSBERG PROPRIETARY - See Statement of Proprietary information

Test bench

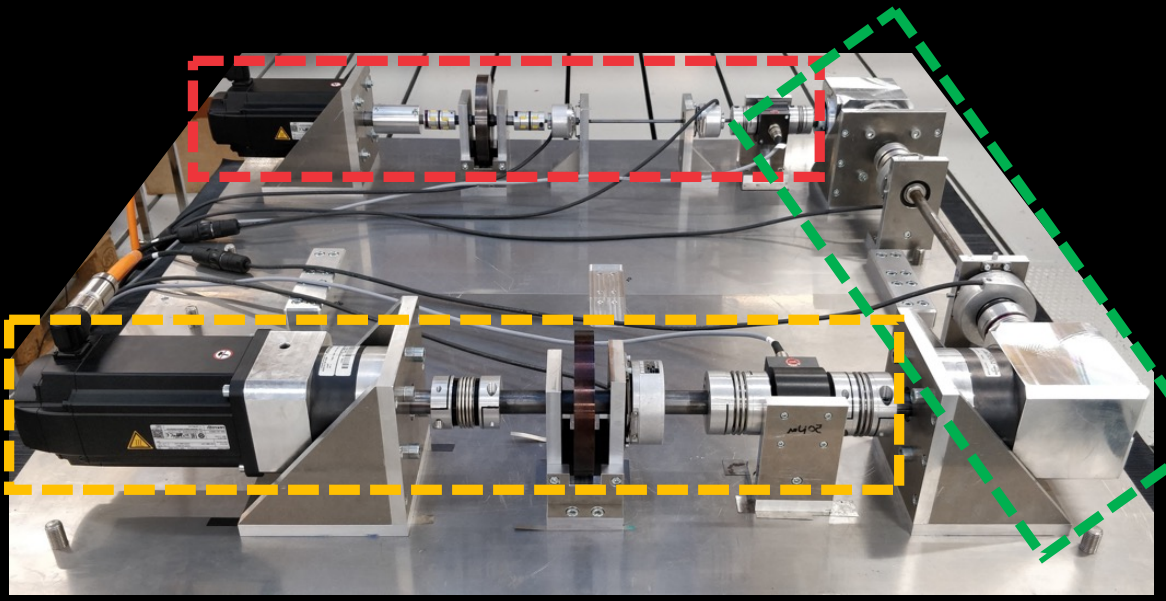

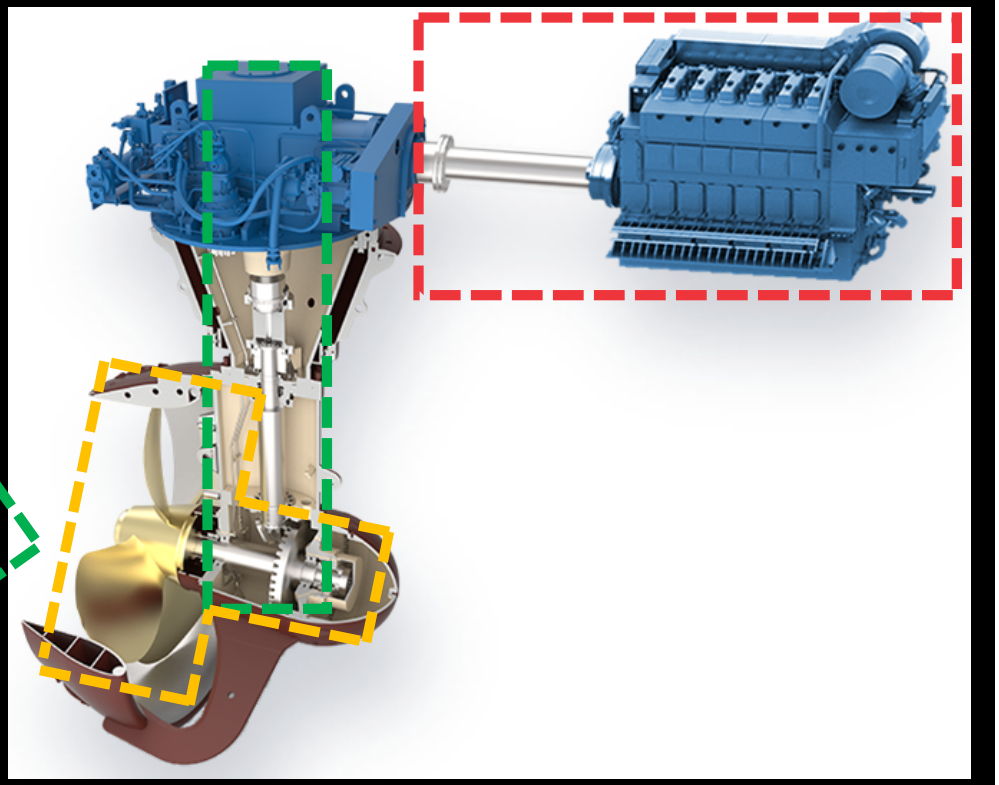

Propeller and Gear spellershaft

Test bench components

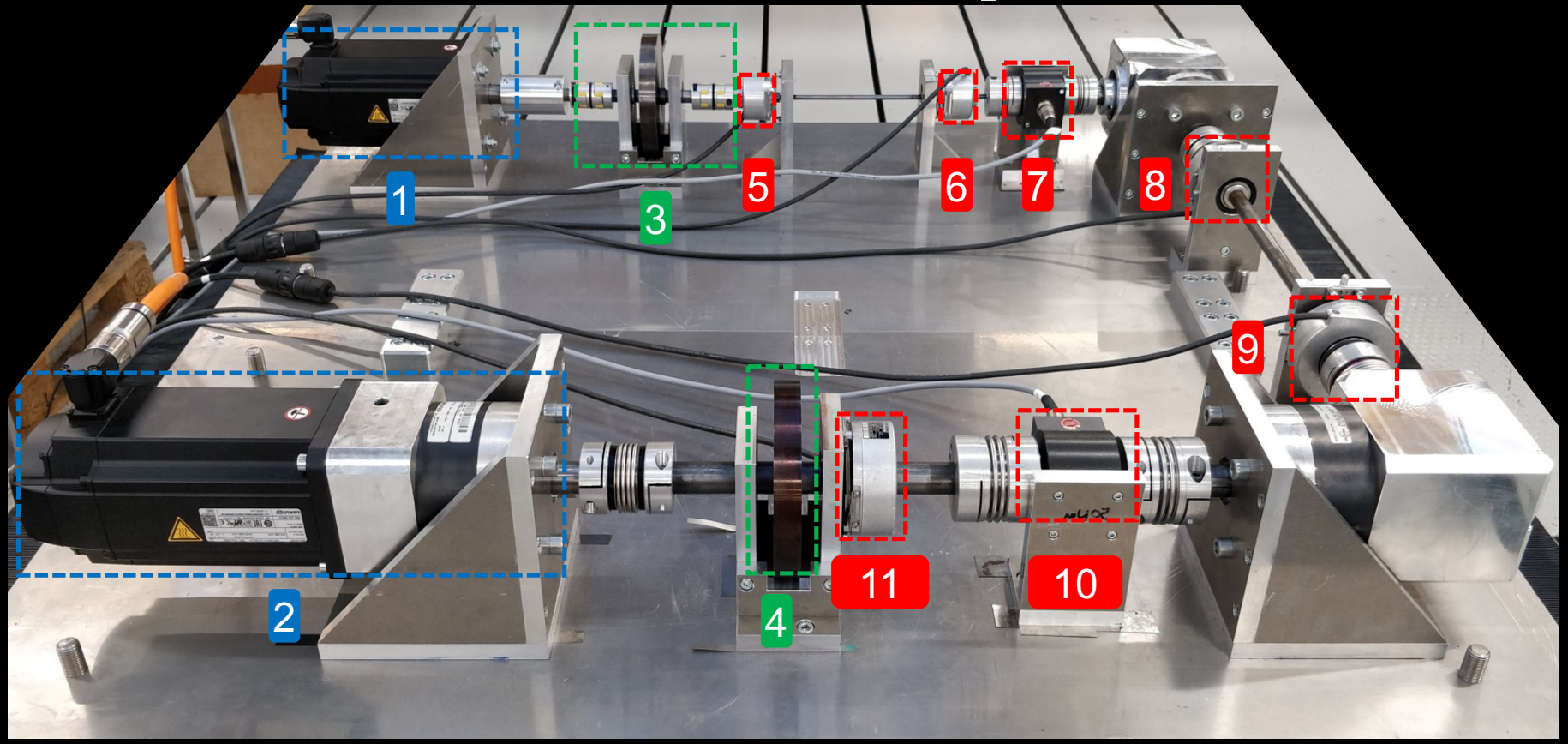

1 Driving motor
2 Load generator
3 Flexible coupling
4 Propeller mass
5 Encoder
6 Encoder
7 Torque transducer
8 Encoder
9 Encoder
10 Torque transducer
11 Encoder

Aalto-yliopisto
Aalto-universitetet
Aalto University

Virtual sensor for thruster

Jesse Miettinen
Doctoral Candidate

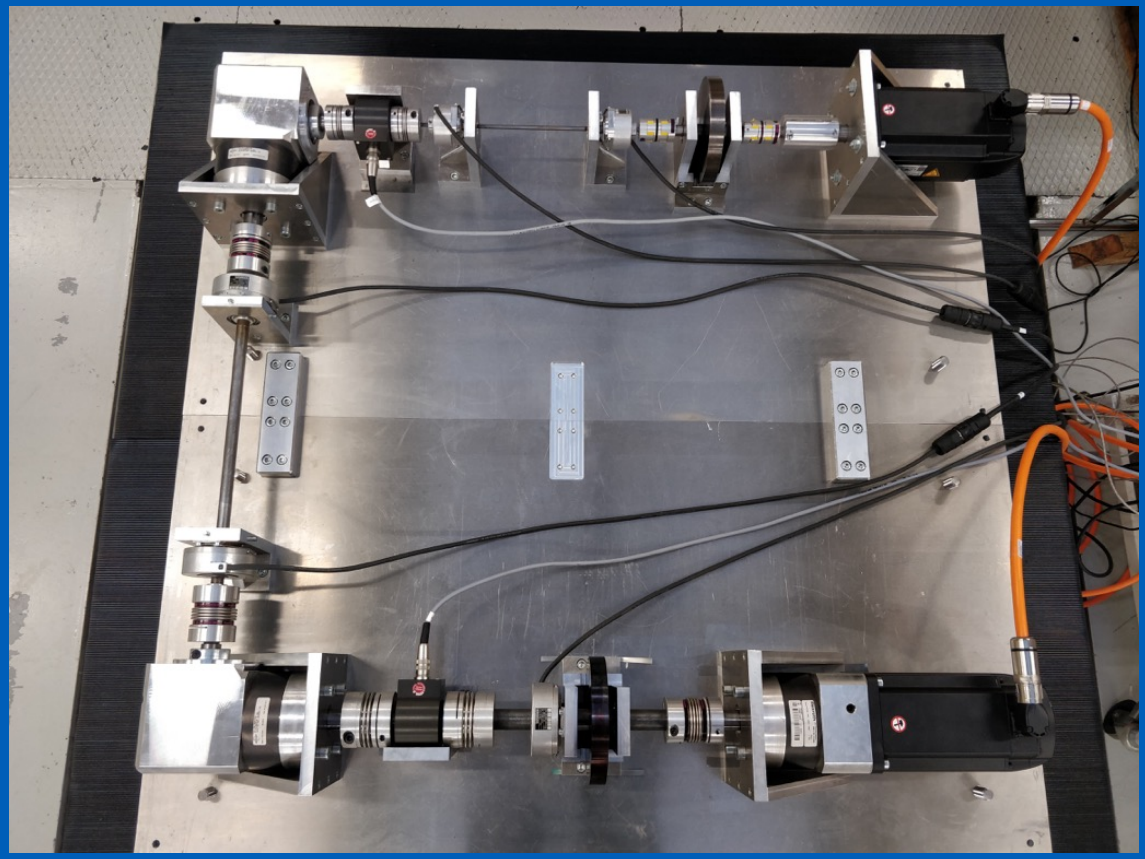

(Sampo Haikonen & Ivar koene)

Aalto-yliopisto

Virtual sensor

- Definition:
  - Computational model that estimates physical quantities indirectly
- Useful:
  - If using physical sensor is difficult;
    - Geometrical restrictions or hazardous environment
  - As secondary information source;
    - When sensor is broken (for example)

Data driven virtual sensor

- Definition:
  - Machine learning model that estimates physical quantities indirectly
- Requires:
  - Training data and test data

Data driven virtual sensor

- Training data:
  - Simulated thruster

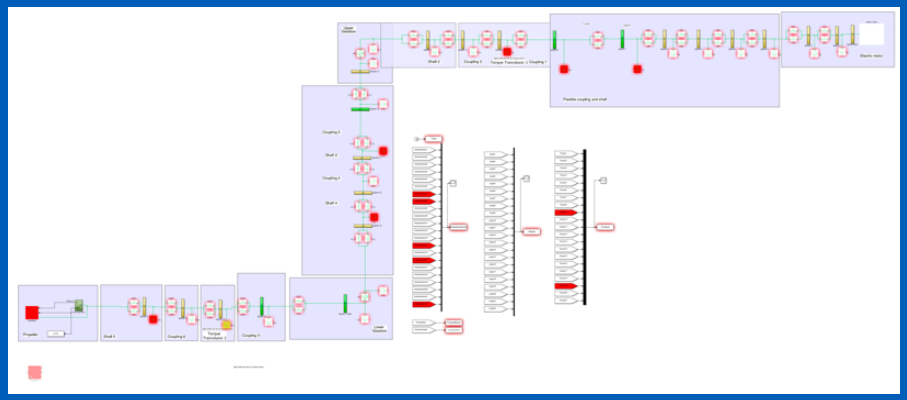

(Kongsberg & Åbo Akademi)

- Test data:
  - Down scaled thruster

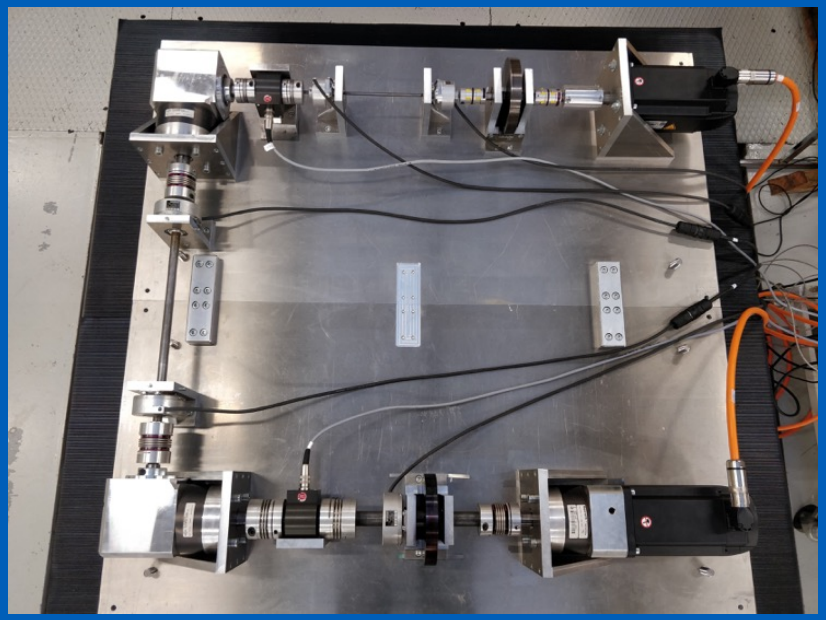

(Sampo Haikonen & Ivar koene)

Data driven virtual sensor
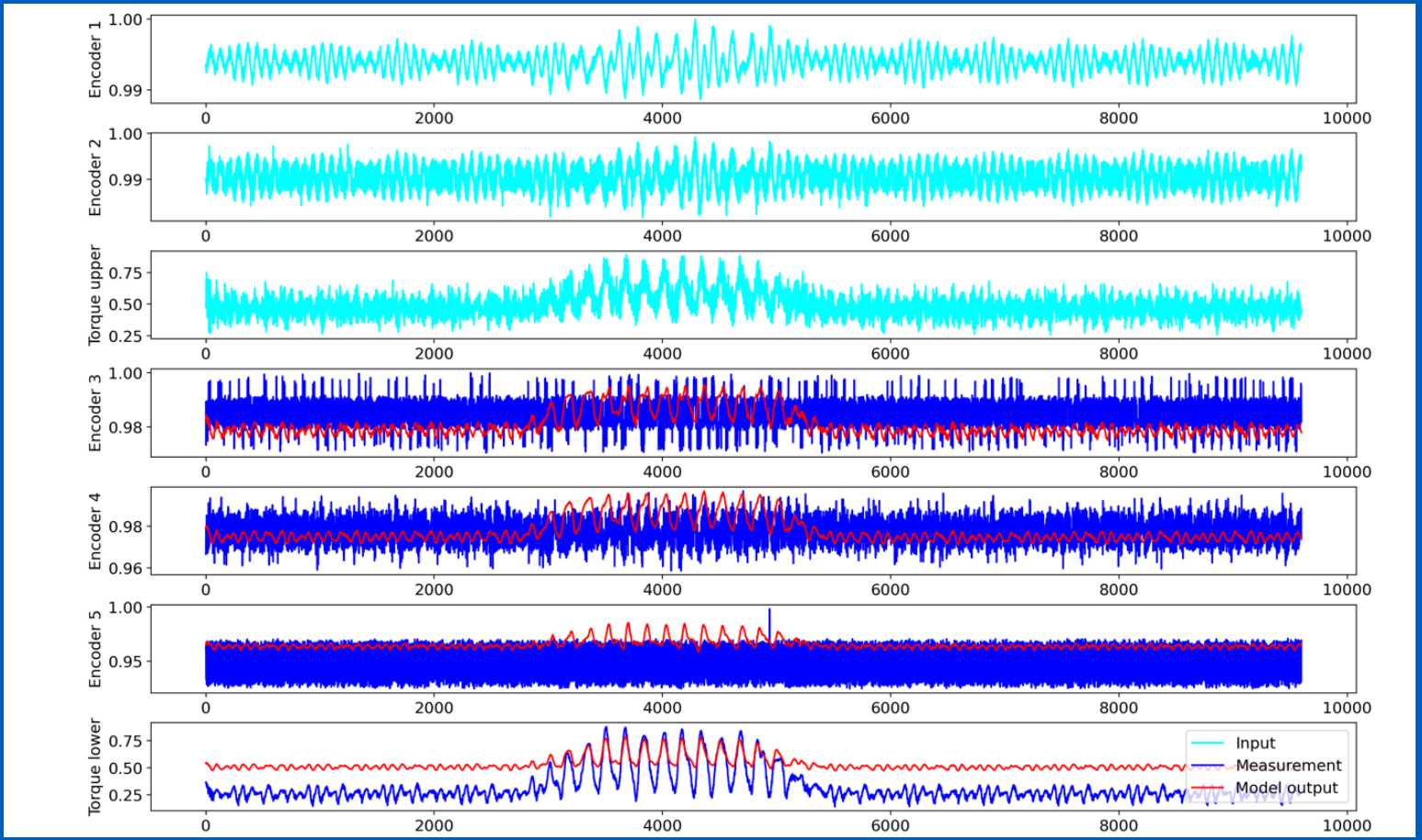
- Preliminary results: